PROJECT 29: Design and Analysis of Full Adder by using Cadence Virtuoso

A Comprehensive Study of Analog Circuits

By: Priya Chaudhary, Astitva Johri and
Bhavya Solanki

Chapters:

List of Figures……..…… 3

1. Introduction …….. 4
2. Brief Description…… 5
3. Circuit Design……. 6-8
   3.1 Schematic Design……... 6
   3.2 Simulation Setup…….. 6
   3.3 Transient Response..…….. 6
4. Simulation Results…….. 9
5. Advantages and Disadvantages…….. 10
   5.1 Advantages……. 10
   5.2 Disadvantages……. 10
6. Conclusion…….. 11
7. Frequently Asked Questions (FAQs)…….. 12

LIST OF FIGURES

Figure 3.1 Circuit of XOR Gate ...…...……..… 7

Figure 3.2 Circuit of AND Gate ...…...……..… 7

Figure 3.3 Circuit of OR Gate ……..……..… 8

Figure 3.4 Circuit of Full Adder ...…...……. 8

Figure 4.1 Simulation Results of Full Adder ……..…..…... 9

1. INTRODUCTION

A **Full Adder** is a fundamental digital circuit that performs binary addition. It takes in three inputs: two binary digits (A and B) and a carry-in bit (Cin), and it outputs two values: the **Sum** (the result of the addition) and the **Carry-out** (Cout), which represents an overflow or carry to the next bit. The Full Adder is crucial for performing arithmetic operations in various digital devices and systems, such as **Arithmetic Logic Units (ALUs)**, **multipliers**, and **digital counters**.

The Full Adder is an essential building block for designing more complex arithmetic circuits, including multi-bit adders (e.g., 4-bit, 8-bit). It also helps facilitate the design of systems that require binary addition, such as processors and digital signal processors (DSPs).

In modern digital designs, Full Adders are often constructed using logic gates like **XOR**, **AND**, and **OR**. In **Cadence Virtuoso**, Full Adders can be designed using both **analog and digital circuit techniques**, which allows for precise optimization in terms of power, area, and speed. This platform offers a comprehensive environment for simulation, verification, and performance analysis of Full Adder circuits.

Truth Table of Full Adder:

A	B	Cin	Sum	Cout
0	0	0	0	0
0	0	1	1	0
0	1	0	1	0
0	1	1	0	1
1	0	0	1	0
1	0	1	0	1
1	1	0	0	1
1	1	1	1	1

2. BRIEF DESCRIPTION

A **Full Adder** is a digital logic circuit used to perform the addition of three binary digits, typically two operand bits and a carry-in bit. It produces two outputs: the **Sum** and the **Carry-out** (Cout). Full Adders are fundamental building blocks for binary addition and are used in arithmetic circuits like **Arithmetic Logic Units (ALUs)** and multi-bit adders.

Full Adders are used in:

- Multi-bit adders (e.g., 4-bit adders).
- Arithmetic Logic Units (ALUs).
- Digital counters, multipliers, and binary addition circuits.

In multi-bit binary addition, Full Adders are connected in series to form a **Ripple Carry Adder** (RCA). In this configuration, the carry-out (Cout) from one Full Adder is connected to the carry-in (Cin) of the next Full Adder. The carry bit "ripples" through the Full Adders, which can result in delays, especially in large adders.

The **carry propagation delay** occurs because the carry bit must propagate through each Full Adder in the chain. The delay increases with the number of bits, making the Ripple Carry Adder inefficient for large-bit additions. To overcome this, **Carry Lookahead Adders (CLA)** are often used, which reduce the propagation delay by calculating carry values in parallel, rather than sequentially.

3. CIRCUIT DESIGN

3.1 Schematic Design

A Full Adder circuit adds three inputs: A, B, and Cin, producing two outputs: **Sum** and **Carry-out (Cout)**. It uses:

1. **2 XOR gates** for Sum generation: Sum = $A \oplus B \oplus Cin$.
2. **2 AND gates** and **1 OR gate** for Cout generation: Cout = $(A \wedge B) \vee (Cin \wedge (A \oplus B))$.

3.2 Simulation Setup

1. **Create Schematic:** Build the Full Adder with XOR, AND, and OR gates.
2. **Inputs:** Use pulse sources for A, B, and Cin.
3. **Outputs:** Place probes for Sum and Cout.
4. **Run Transient Analysis:** Set simulation time (e.g., 10ns) to observe the change in outputs as inputs vary.

3.3 Transient Response

1. **Sum**: Changes according to the binary addition of A, B, and Cin.
2. **Cout**: "High" when there’s a carry, otherwise "Low".

The Full Adder circuit can be efficiently designed and simulated in **Cadence Virtuoso**. Transient response analysis helps verify the correctness of the circuit in real-time operation.

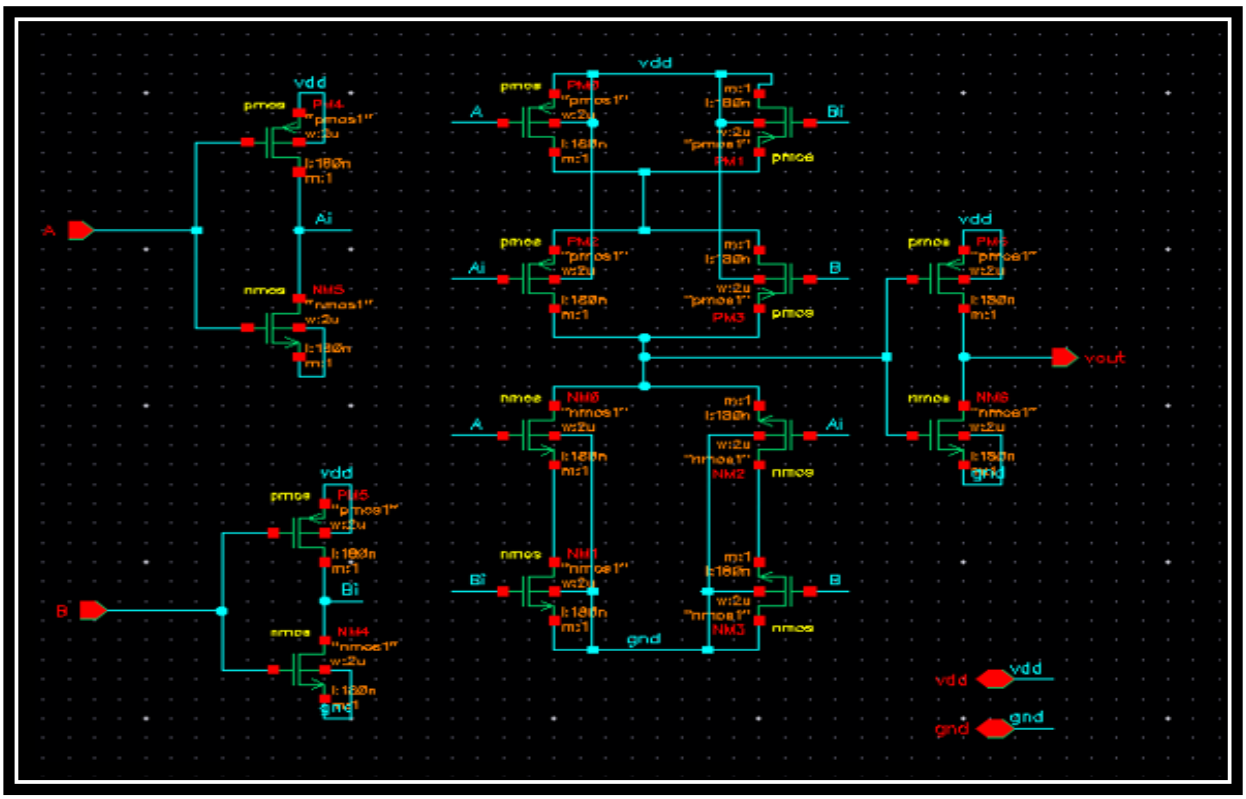

Figure 3.1 Circuit of XOR Gate

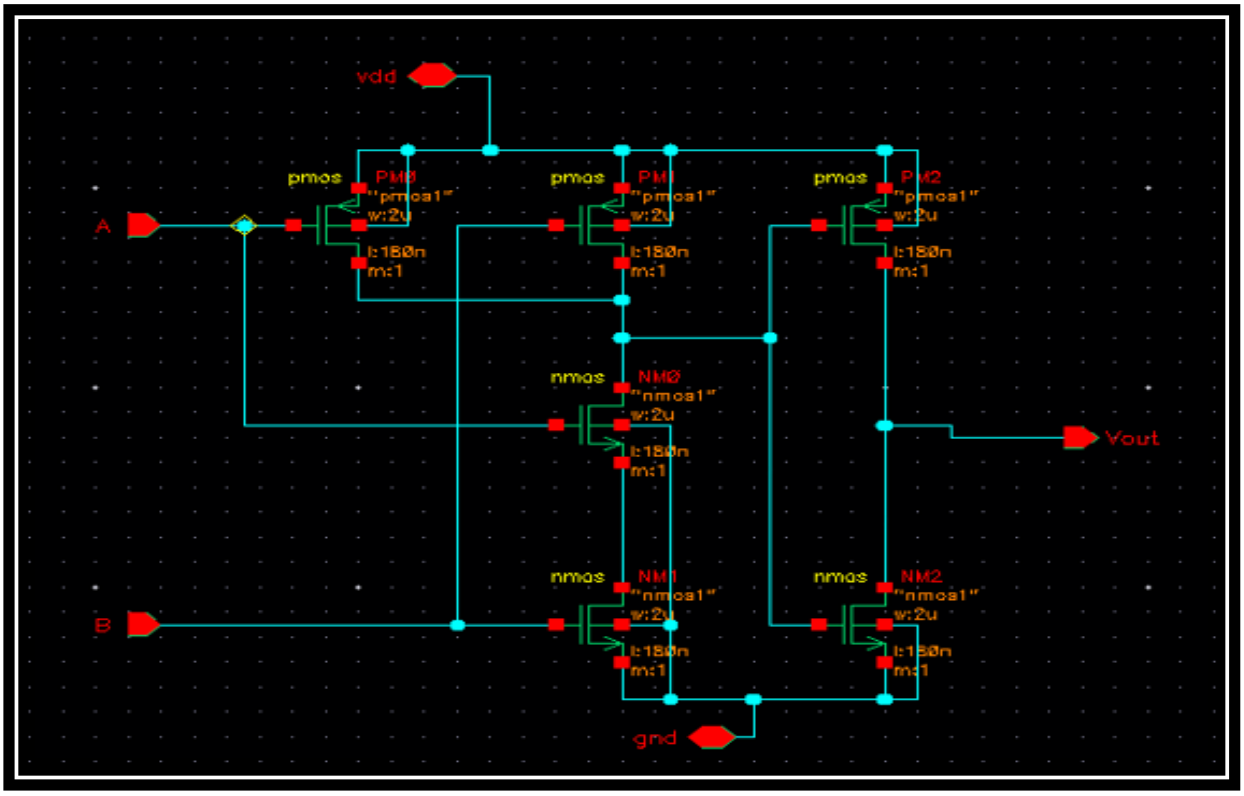

Figure 3.2 Circuit of AND Gate

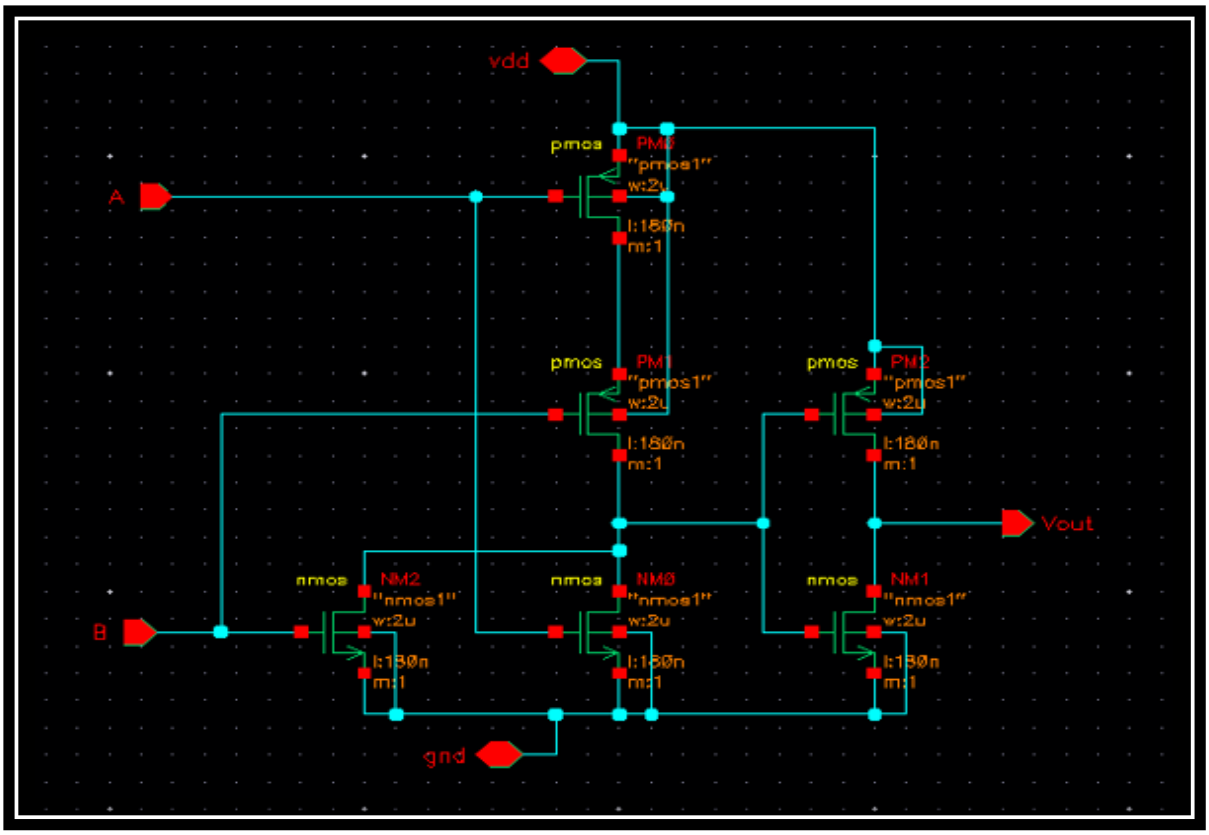

Figure 3.3 Circuit of OR Gate

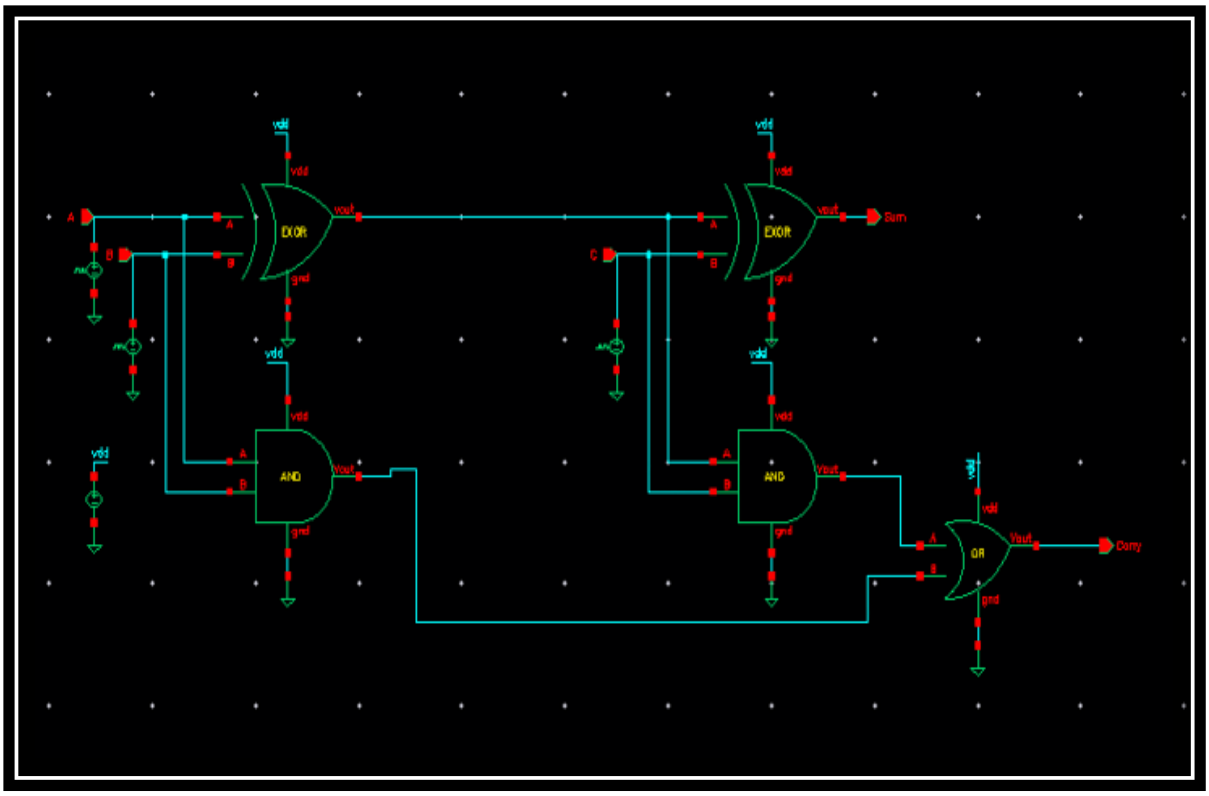

Figure 3.4 Circuit of Full Adder

4. SIMULATION RESULTS

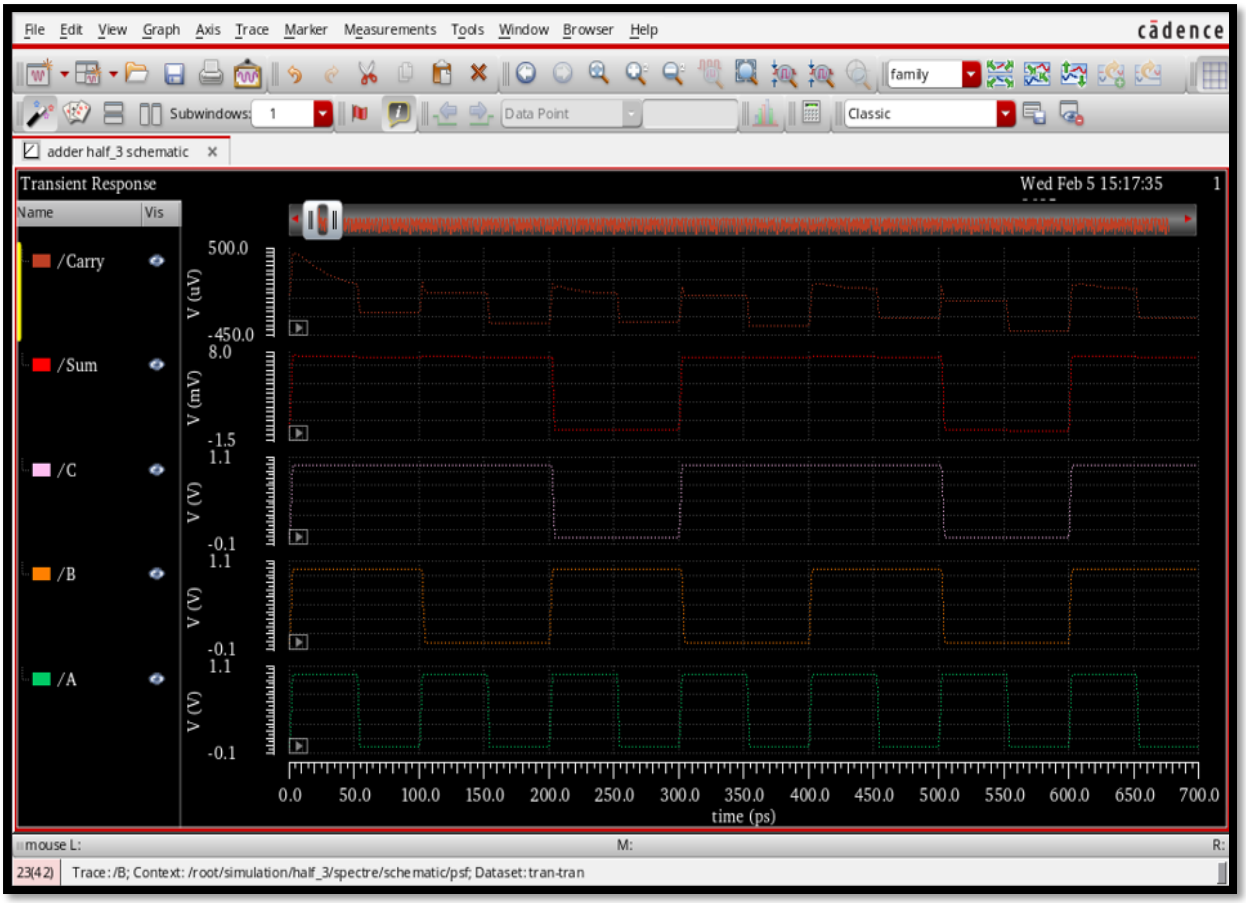

Figure 4.1: Simulation Results of Full Adder

5. ADVANTAGES AND DISADVANTAGES

5.1 Advantages:-

1. **Fast Computation:** Full adders allow for faster addition of binary numbers, which is crucial in high-speed processors.
2. **Scalable:** Full adders can be chained together to form multi-bit adders (e.g., 4-bit, 8-bit adders) to handle larger numbers.
3. **Low Complexity:** When implemented using logic gates, full adders are relatively simple and easy to design.
4. **Error-Free Addition:** Full adders ensure accurate addition of binary numbers, including carry propagation.

5.2 Disadvantages:-

1. **Power Consumption:** In large-scale implementations, full adders can consume significant power due to multiple gates and logic switching.
2. **Delay and Propagation:** The carry propagation delay can increase as more bits are added, affecting the overall speed of multi-bit adders.
3. **Area:** The design of full adders requires space on the IC layout, which could be a limitation in compact designs.
4. **Complexity in Larger Systems:** While simple in isolation, a system of many full adders (e.g., for 32-bit or 64-bit addition) could become complex in terms of layout and power optimization.

6. CONCLUSION

The **Full Adder** is a key component in digital design, forming the backbone of many arithmetic operations in binary systems. Its ability to add binary numbers while handling carry propagation makes it indispensable in larger systems, such as ALUs and binary counters. In **Cadence Virtuoso**, Full Adder circuits can be efficiently designed and optimized for various performance metrics such as power consumption, speed, and area.

While the Full Adder circuit is relatively simple in concept, its proper design and analysis can have significant implications for the performance of larger digital systems. As we move toward more compact, high-speed devices, it is crucial to understand and optimize Full Adder circuits. With the powerful simulation and design tools provided by Cadence Virtuoso, engineers can create highly efficient Full Adder circuits that meet the demands of modern digital applications.

The **scalability**, **reliability**, and **flexibility** of Full Adders ensure their continuous use in the field of digital electronics, particularly in the design of processors and complex computation systems. Through detailed design and analysis using tools like Cadence Virtuoso, the Full Adder remains a critical element in achieving efficient, high-performance digital circuits.

7. FREQUENTLY ASKED QUESTIONS (FAQs)

Q1. What is the difference between a Full Adder and a Half Adder?

Answer: A Half Adder is a simpler circuit that adds two binary bits and produces a sum and carry output. A Full Adder, on the other hand, adds three binary inputs (two bits and a carry-in) and generates a sum and carry-out.

Q2. Can I use Cadence Virtuoso for designing large multi-bit adders like a 16-bit or 32-bit adder?

Answer: Yes, Cadence Virtuoso is well-suited for designing large multi-bit adders. You can chain multiple Full Adders to create larger adders and analyze the design for speed, power, and area constraints.

Q3. How does the carry propagation affect the performance of the Full Adder?

Answer: Carry propagation introduces a delay in the addition process. As the carry bit propagates through each Full Adder in the chain, the total addition time increases, leading to longer computation times for multi-bit adders. This issue can be minimized by using optimized carry-lookahead techniques or parallel adder architectures.

Q4. What are the typical applications of a Full Adder in digital systems?

Answer: Full Adders are used in **ALUs**, **multipliers**, **dividers**, and **binary counters** for binary arithmetic operations in digital systems.

Q5. Can Full Adders be designed using only CMOS technology in Cadence Virtuoso?

Answer: Yes, Full Adders can be designed with **CMOS technology** in Cadence Virtuoso, offering benefits like low power consumption and high performance.